GNWQ SERIES Cutting Pump **Non-clogging Sewage Submersible Pump**

PRODUCT FEATURES

Vortex impeller

Strong cutter

Cutter Impeller With Cutter Ring

1.the impeller with non clogging design.
2.material for the impeller and cutter ring:high-chromium stainless steel 420 and the hardness is HRC49-52 provide good wearing resistance.

Heavy duty bearing

Heavy duty bearing and ss420 shaft

Mechanical Seal

A double mechanical seal consists of two seals arranged in a series. Superior abrasion resistant mechanical seal manufactured with silicon carbide to ensure the best seal effect.

GNWQ SERIES CUTTING PUMP CURVE

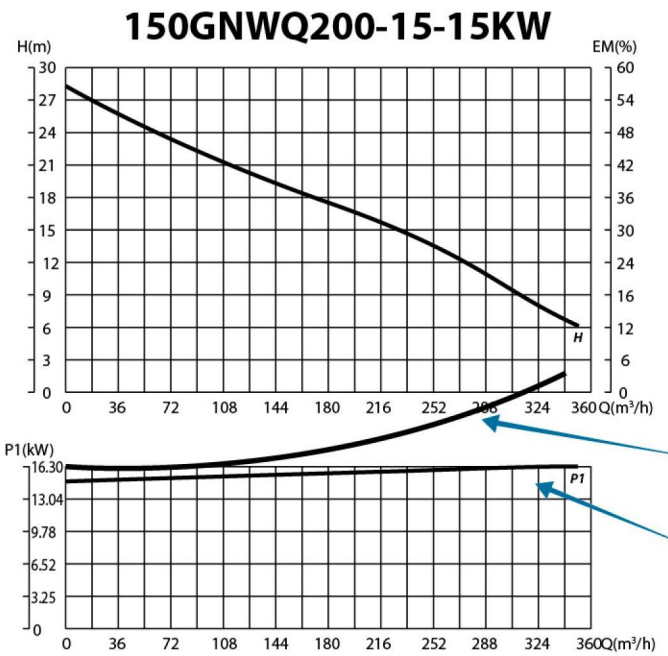

NORMAL SEWAGE PUMP will clog by the rubish inside wastewater
GNWQ Non clogging pump good solve these problem..

Normal sewage pump the power need very big when use the big flow point.and motor will be heating and burn broken

OLBIN GNWQ pump can use every point flowrate.and power is almost one level.motor temperature is almost same level.

GNWQ SERIES Cutting Pump **Non-clogging Sewage Submersible Pump**

Characteristic

1.Vortex semi-open impeller insure through big solid size
2.material for the cutter and cutter ring:
high-chromium stainless steel 420 and the hardness isHRC49-52 provide good wearing resistance.

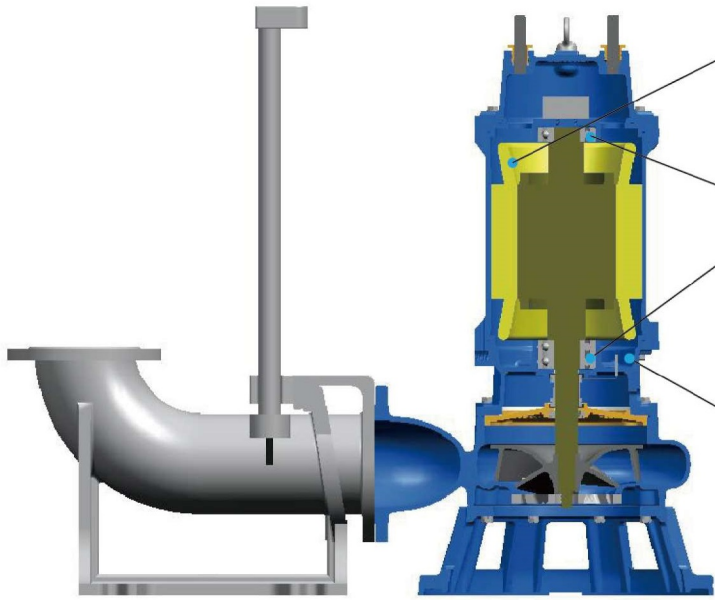

Motor Thermal Sensor(MTS)

MTS is a bimetal type motor protector, which is embedded in each phase of stator winding. When overheat is detected, the sensor (in winding) will trip and the rely switch (in control box) will cut off the power supply of pump. (MTS is a regular component of pump, 15HP and above).

Bearing Temperature Sensor(BTS)

The BTS is a temperature sensor which is installed in the stationary of bearing. The BTS has to be connected to "indicator of temperature control" in control box. When the bearing temperature exceed the pre-setting temperature of "indicator of temperature control", the rely switch will cut off the power supply of pump. (BTS is an optional component of pump model).

Moisture Sensor (MS)

MS is an electrode sensor of water intrusion in all chamber. When water leakage is detected, the rely switch (in control box) will cut off the power supply of pump. (MS is a regular component of pump, 15HP and above). Thus, the damaged mechanical seal and lubricant can be replaced before water leakage occurs in motor housing. (MS is a regular component of pump, 15HP and above).

PRODUCT NOMENCLATURE

100	GNWQ	60	24	11
Outlet Size(mm)	Pump Type	Rated Flow	Rated head	Power

APPLICATIONS:

- Drainage of wastewater in river ,waste water athreatment factory.
- Commercial building ,industrial area and amusement place drainage.
- School ,hospital ,government building and park drainage.
- Chicken farm,cow farm, pig farm ,fish farm ,slaughterhouse drainage.

SPECIFICATIONS

Item		Description
Limits of Use	Liquid Temp.	0~40°C (32~104°F)
	Applications	wastewater.sewage
Type	Frequency	50Hz
	Motor	4P(1450Rpm) • Dry motor
	Insulation	Class F
	Protection	IP68
	Protector	Thermal protect for motor ,bearing .moisture sensor. (other protector in control box)
	Bearing	Ball type
	mechanical seal	Double M.seals
	Impeller	Vortex non-clogging cutter impeller

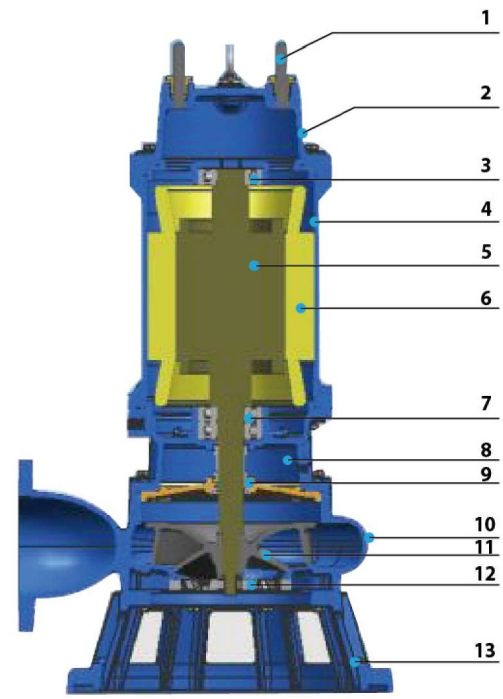

1	Cable	8	lubricant
2	motor upper cover	9	Mechanical seal
3	bearing	10	pump casing
4	motor frame	11	impeller
5	motor rotor	12	cutter ring
6	motor stator	13	base
7	bearing		

PERFORMANCE CURVE

50HZ 60HZ

Performance Curve (11kw-15kw)

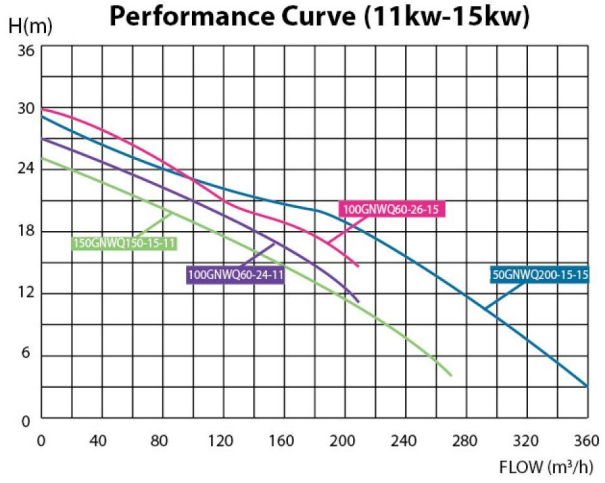

Performance Curve (18.5kw-22kw)

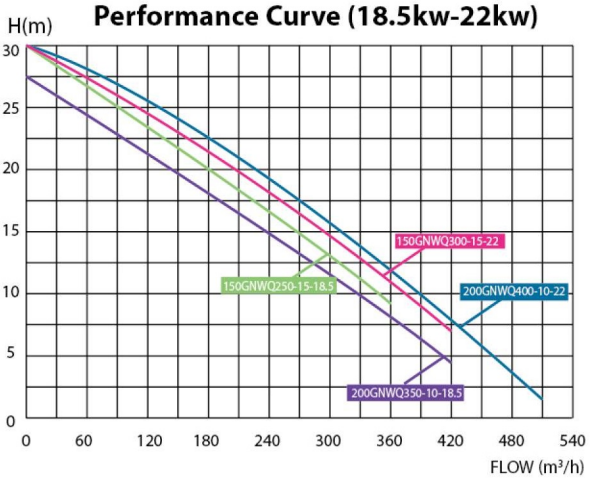

Performance Table (11kw-22kw)

Model	Driving motor P2(kw)		Q(m³/h)	0	30	60	90	120	180	210	240	270	300	330	360	420	480	510
	Kw	Hp	Q(L/min)	0	500	1000	1500	2000	3000	3500	4000	3500	4000	5500	6000	7000	8000	8500
100GNWQ60-24-11	11	15	H(m)	27	25.9	24	21.9	19	15.5	11								
150GNWQ150-15-11	11	15		25.5	23	21.5	17	17	13.5	9.5	8	4						
100GNWQ60-26-15	15	20		30	29	26	23	21	18	14.5								
150GNWQ200-15-15	15	20		29	27.5	26	23	22	20	17	15	12	10	7	3			
150GNWQ250-15-18.5	18.5	25	H(m)	30	28	26	25	23.5	19.5	17	16	15	13	12	9			
200GNWQ350-10-18.5	18.5	25		27.5	26	24	23	22	18	16	15	14	12	11	9.2	4		
150GNWQ300-15-22	22	30		31	30	27.5	26	25	21	19	17.5	16	15	13	11.9	6.9		
200GNWQ400-10-22	22	30		30	29	27.8	26.5	25.5	21.5	19	18	17	15.5	14	12	7	3	1.8

Performance Table (30kw-55kw)

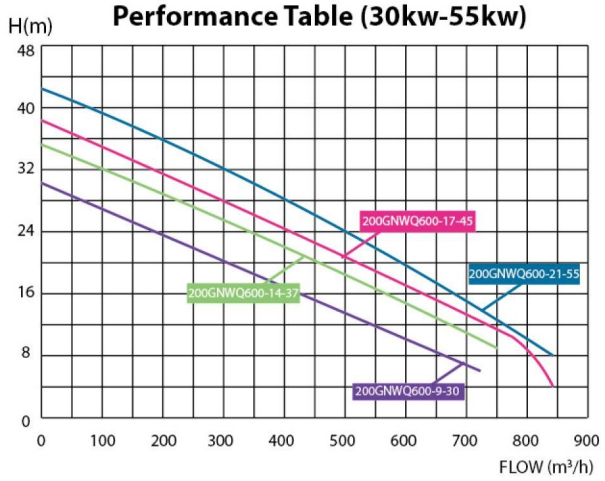

Performance Table (75kw-132kw)

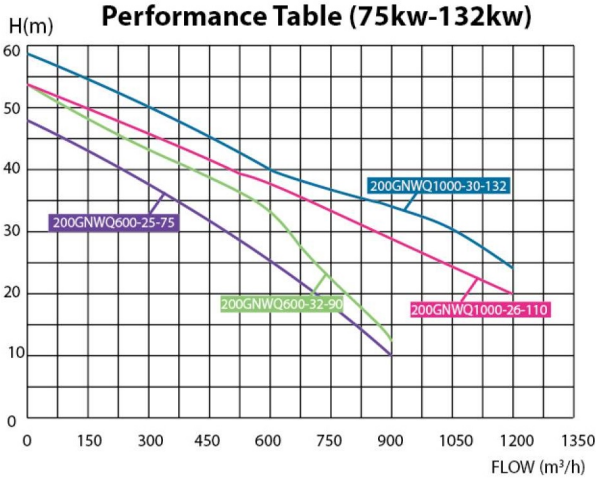

Performance Table (30kw-132kw)

Model	Power		Q(m³/h)	0	120	240	360	480	600	720	840	900	1020	1200
	Kw	Hp	Q(L/min)	0	2000	4000	6000	8000	10000	12000	14000	15000	17000	20000
200GNWQ600-9-30	30	40	H(m)	30	26	22	18	14	11	6				
200GNWQ600-14-37	37	50		35.5	31.5	27	22.5	18	14.5	9				
200GNWQ600-17-45	45	60		38.5	34.5	30	26	22	18	11.5	4			
200GNWQ600-21-55	55	75		42.5	38	34	30	26	22	15.5	8			
200GNWQ600-25-75	75	100		48	44	39	35	30	26	20	12.5	10		
200GNWQ600-32-90	90	125		54	50	46	42	37.5	34	25	16	12		
200GNWQ1000-26-110	110	150		54	50.5	47	44	40.5	38	34	30	29	25.5	20
200GNWQ1000-30-132	132	175		58	55.5	52	49	45.5	40	38	35	33	30	24

GNWQ SERIES Cutting Pump **Non-clogging Sewage Submersible Pump**

PUMP SPECIFICATION TABLE

Pole	Model	Output HP(kW)	Discharge Inch(mm)	Phase Ø	Start	Standard		Solid Passage mm(inch) without cutter ring
						m-m³/hr	ft-GPM	
4P	100GNWQ60-24-11	15(11)	4" (100)	3	direct/delta	25-80	82-293	40(1.5)
	150GNWQ150-15-11	15(11)	6" (150)	3	direct/delta	15-150	49-550	60(2.5)
	100GNWQ60-26-15	20(15)	4" (100)	3	direct/delta	30-80	98-293	40(1.5)
	150GNWQ200-15-15	20(15)	6" (150)	3	direct/delta	15-200	49-733	60(2.5)
	150GNWQ250-15-18.5	25 (18.5)	6" (150)	3	direct/delta	15-250	49-917	60(2.5)
	200GNWQ350-10-18.5	25 (18.5)	8" (200)	3	direct/delta	12-350	39-1283	80(3)
	150GNWQ300-15-22	30 (22)	6" (150)	3	direct/delta	22-200	29.5-733	60(2.5)
	200GNWQ400-10-22	30 (22)	8" (200)	3	direct/delta	10-400	33-1466	80(3)
	200GNWQ600-9-30	41 (30)	8" (200)	3	direct/delta	9-600	30-2199	80(3)
	200GNWQ600-14-37	50 (37)	8" (200)	3	direct/delta	12-600	39-2199	80(3)
	200GNWQ600-17-45	61 (45)	8" (200)	3	direct/delta	15-600	49-2199	80(3)
	200GNWQ600-21-55	75(55)	8" (200)	3	direct/delta	20-600	66-2199	80(3)
	200GNWQ600-25-75	102(75)	8" (200)	3	direct/delta	25-600	82-2199	80(3)
	200GNWQ600-32-90	122(90)	8" (200)	3	direct/delta	30-600	98-2199	80(3)
	200GNWQ1000-26-110	136(110)	8" (200)	3	direct/delta	25-1000	82-3666	80(3)
	200GNWQ1000-30-132	180(132)	8" (200)	3	direct/delta	30-1000	98-3666	80(3)

PUMP DIMENSION TABLE

Model	A(mm)	B(mm)	C(mm)	D(mm)	E(mm)	F(mm)	G(mm)	N(kg)
100GNWQ60-24-11	100	578	1038	475	240	170	18	219
150GNWQ150-15-11	150	588	988	510	225	225	18	226
100GNWQ60-26-15	100	578	1038	475	240	170	18	233
150GNWQ200-15-15	150	588	1018	510	225	225	18	241
150GNWQ250-15-18.5	150	618	1080	510	235	225	18	325
200GNWQ350-10-18.5	200	618	1135	520	265	295	22	334
150GNWQ300-15-22	150	618	1080	510	235	225	18	350
200GNWQ400-10-22	200	618	1135	520	265	295	22	359
200GNWQ600-9-30	200	730	1240	620	305	295	22	505
200GNWQ600-14-37	200	730	1240	620	305	295	22	538
200GNWQ600-17-45	200	730	1285	620	305	295	22	554
200GNWQ600-21-55	200	835	1396	735	385	295	22	772
200GNWQ600-25-75	200	835	1461	735	385	295	22	812
200GNWQ600-32-90	200	835	1520	735	385	295	22	1095
200GNWQ1000-26-110	200	835	1580	735	385	295	22	1210
200GNWQ1000-30-132	200	835	1630	735	385	295	22	1350

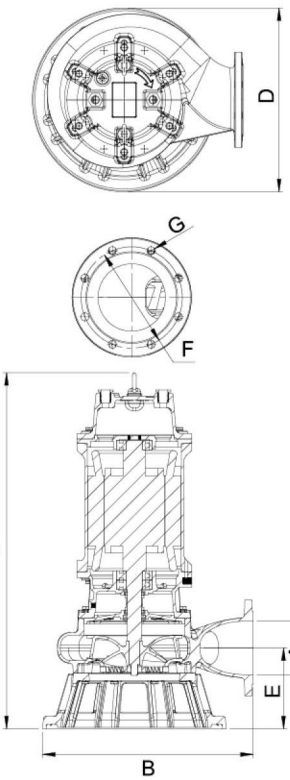

Auto-Coupling

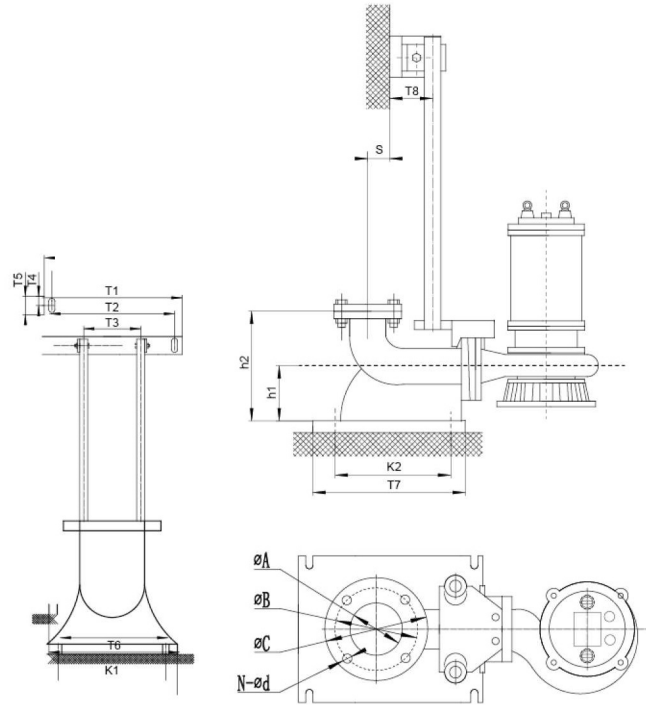

- Fix to the pumps with flange conforming ISO7005-92 standard.
- Sewage pump with standard flanged elbow can connect to this auto-coupling diectly.

Supplied with

- Coupling seat
- Coupling adapter
- Upper guide support

Dimensions table

Model	ØA	ØB		ØC	N-Ød	T1	T2	T3	T4	T5	T6	T7	T8	K1	K2	S	h1	h2
		6Kg	10Kg															
DN50	Ø50/G2"	100	125	139	4-Ø14	266	218	104	20.5	41	197	208	79	162	133	54.5	160	250
DN65	Ø65/G2½"	130	145	160	4-Ø14	280	236	126	25	50	228	235	95	186	155	91	166	266
DN80	Ø80/G3"	150	160	190	4-Ø18	318	266	146	26	52	256	235	97	213	155	78	188	306
DN100	Ø100/G4"	170	180	210	4-Ø18	365	306	169	27.5	55	293	258	115	261	176	101	232	350
DN150	Ø150/G6"	225	240	280	8-Ø18	412	260	280	31	62	400	412	118	280	298	191	305	490
DN200	Ø200/G8"	280	295	330	8-Ø18	412	260	280	31	62	398	445	116	298	353	230	325	550
DN250	Ø250/G10"	335	350	400	12-Ø18	412	260	280	31	62	460	560	120	360	430	300	314	630
DN300	Ø300/G12"	395	395	444	12-Ø22	522	344	299	33	66	550	565	115	410	410	285	400	740

Weights & Packing dimensions

Model	N.W	G.W	Packing dimension
	kg	kg	mm
50-50(PN6)	17	19.5	350×320×245
65-65(PN6)	24	27	390×270×345
80-80(PN6)	31	34.5	410×290×395
100-100(PN6)	45	50	470×330×475
150-150(PN6)	96	105	700×440×610
150-150(PN10)	95	104	700×440×610
200-200(PN10)	132	142	770×440×650
250-250(PN10)	179	191	900×510×710
300-300(PN10)	230	245	940×570×810

Model	Guide pipe	Foundation bolts		Upper guide support bolts
DN50	1" / Ø33.3×3.5	4-M25	4-M28	2-M13
DN65	1" / Ø33.3×3.5	4-M25	4-M28	2-M13
DN80	1½" / Ø48.3×3.5	4-M38	4-M42	2-M13
DN100	1½" / Ø48.3×3.5	4-M38	4-M42	2-M13
DN150	1½" / Ø48.3×3.5	4-M38	4-M42	2-M15
DN200	1½" / Ø48.3×3.5	4-M25		2-M15
DN250	1½" / Ø48.3×3.5	4-M25		2-M15
DN300	2" / Ø60.3×3.5	4-M25		2-M16